AA16-0.13-9 SOJ22GL

16 Elements
Avalanche Photodiode Array

Special characteristics:

quantum efficiency >80% at λ 760-910 nm
high speed, low noise
good uniformity between elements
low cross talk
with NTC as temperature control device

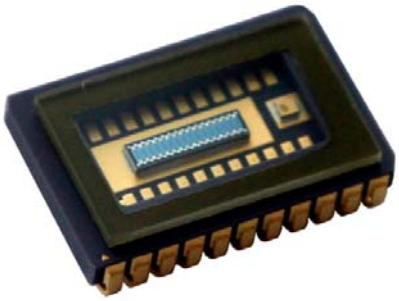

Parameters:	AA16-0.13-9 SOJ22GL
no. of Elements	16
Active Area / Element [µm]	648 x 208
Gap / Separation [µm]	112
Pitch [µm]	320
Spectral Range	450 … 1050
Spectral Responsivity [1)] (at 905 nm, M = 100)	min. 55 A/W typ. 60 A/W
Max. Gain (Ipo = 1nA)	typ. 100
Dark Current [1)] (M = 100)	typ. 5 nA
Capacitance [1)]/ Element (M=100)	typ. 1.5 pF
Breakdown Voltage U_{BR} (at I_D = 2 µA)	100 … 300 V
Rise Time at 905 nm, 50 Ω	typ. 2 ns
Cross-talk (at 905 nm)	typ. 50 dB
Photo Current Uniformity (at M= 50)	± 20 % typ. ± 5 %
Dark Current Uniformity (at M= 50)	± 20 % typ. ± 5 %
Resistance at +25 °C [2)]	10 kΩ
Alpha Value at 25 °C [2)]	-4.39 %/°C
Beta Value 25/85 [2)]	3976 K
Operating Temperature Storage Temperature	-20 ... +70 °C -40 ... +100 °C

1) Measurement conditions:
Setup of photo current 1.0 nA at M = 1 and irradiation by an IRED (880 nm, 80 nm bandwidth).

Increase the photo current up to 50 nA, (M = 50) by internal multiplication due to an increasing bias voltage.

***2)** Technical parameter of the temperature control device (NTC).*

RoHS compliant

Package SOJ22GL (AA16-0.13):

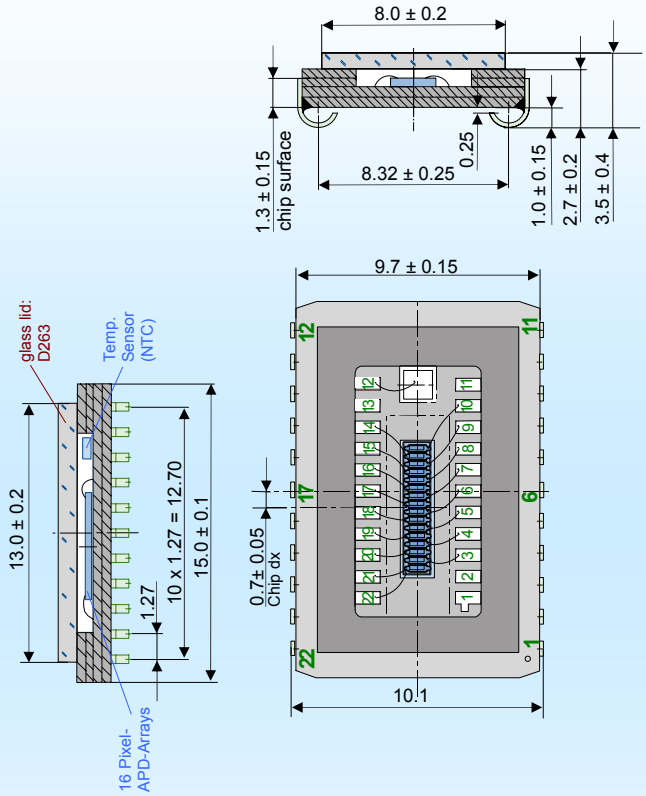

Pin no.	Function	
1	Common Anode	
2	n.c.	
3	Cathode	2
4	Cathode	4
5	Cathode	6
6	Cathode	8
7	Cathode	10
8	Cathode	12
9	Cathode	14
10	Cathode	16
11	Temp.-Sensor	

Pin no.	Function	
12	Temp.-Sensor	
13	n.c.	
14	Cathode	15
15	Cathode	13
16	Cathode	11
17	Cathode	9
18	Cathode	7
19	Cathode	5
20	Cathode	3
21	Cathode	1
22	guard ring	

Version: 09-08-21
Order number: 501098

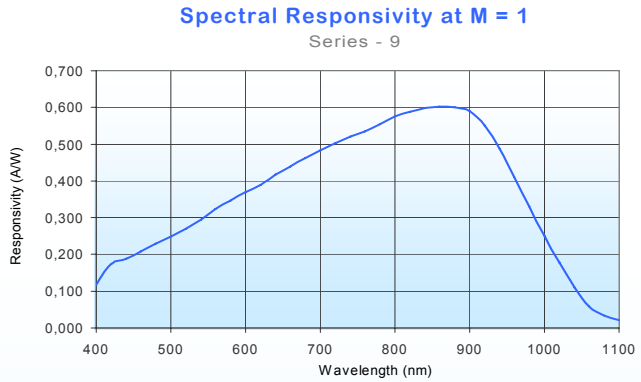

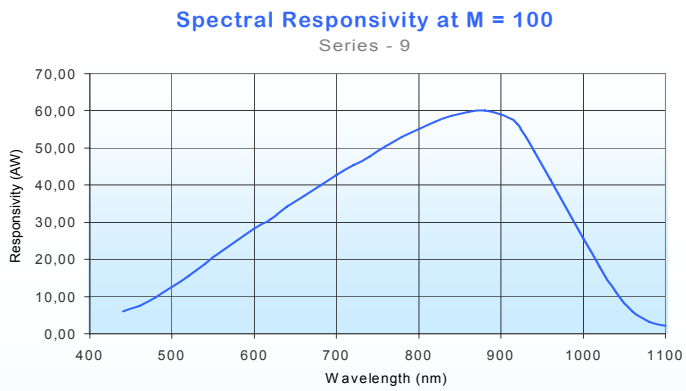

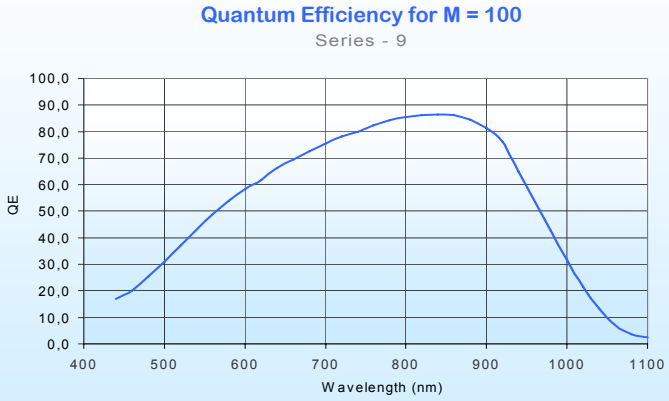

Maximum Ratings:

- max. electrical power dissipation — 800 mW at 22°C
- max. optical peak value, once — 400 mW for 1 s
- max. continuous optical operation — I_{Ph} (DC) ≤ 250 µA
  ≤ 1 mA for signal 50 µs "on" / 1 ms "off"
- ($P_{electr.} = P_{opt.} * S_{abs} * M * U_R$)

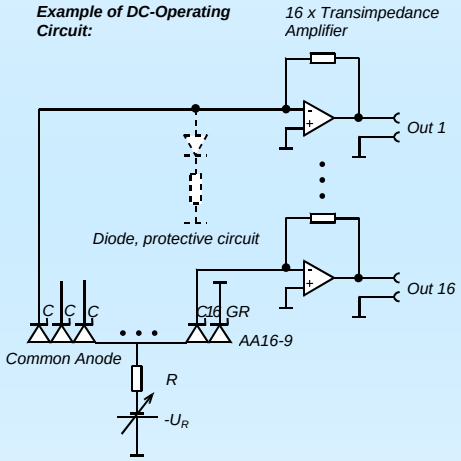

Application Hints:

- Current should be limited by a protecting resistor or current limiting - IC inside the power supply.
- Use of low noise read-out - IC.
- Use temperature sensor for temperature compensation of the bias voltage.

Handling Precautions:

- SMD mounting: Lead free soldering possible.
- Soldering temperature: The maximum temperature at the component must not exceed 250 °C. The range over 220 °C should not take more than 1 min. The device must be protected against solder flux vapour!
- ESD – protection: Standard precautionary measures are sufficient.
- Storage: Devices stored in Trays or (for bigger volumes) Embossed Carrier Tape
  Maximum storage time 12 months.

- Avoid skin contact with window!
- Clean window with Ethyl alcohol if necessary.
- Do not scratch or abrade window.

SILICON SENSOR GmbH

European, International Sales:

Silicon Sensor International AG
Wilhelminenhofstraße 76/77
12459 Berlin
Germany
Phone: +49 (0)30-63 99 23 10
Fax: +49 (0)30-63 99 23 33
E-Mail: sales@silicon-sensor.de

PACIFIC SILICON SENSOR Incorporated

U.S.A.:

Pacific Silicon Sensor, Inc.
5700 Corsa Avenue #105
Westlake Village
CA 91362 USA
Phone: +1-818-706-3400
Fax: +1-818-889-7053
E-Mail: sales@pacific-sensor.com